Butterfly valves PN6, PN10, PN16 for shut-off function

- **for open and closed cold and warm water systems**
- **connection and disconnection of several heat or cold generators**
- **for open heat exchangers**

Type overview

Type	k_{vs} [m³/h]	DN [mm]	Actuator type / closing pressure Δp_s									
			AF..	SR..-5	GR..-5	GR..-7	DGR..-7	SY1	SY2	SY3	SY4	SY5
			Δp_s [kPa]	Δp_s [kPa]	Δp_s [kPa]	Δp_s [kPa]	Δp_s [kPa]	Δp_s [kPa]	Δp_s [kPa]	Δp_s [kPa]	Δp_s [kPa]	Δp_s [kPa]
D650	100	50	1200	1200	1200			1200				
D665	170	65	1200	1200	1200			1200				
D680	290	80	600	1200	1200			1200				
D6100	560	100		200	1200			1200				
D6125	870	125				600	1200		1200			
D6150	1340	150					600		1200			
D6200	2690	200							300	1200		
D6250	5540	250									1200	
D6300	7540	300									600	1200
D6350	10300	350										600

Definition of Δp_s
Closing pressure at which the actuator can still seal the valve tightly allowing for the appropriate leakage rate.

Technical data

Functional data	Flow media	Cold and hot water, water with max. 50% volume of glycol
	Temperature of medium	+2°C ... +90°C for water (without glycol) –20°C ... +70°C for water with glycol (lower or higher temperatures on request)
	Rated pressure p_s	1600 kPa (PN6, PN10, PN16)
	Flow rate k_{vs}	See «Type overview»
	Leakage rate	Tight (BN1, DIN 3230 T3)
	Pipe connector	Flange PN6, PN10, PN16
	Closing pressure Δp_s	See «Type overview»
	Angle of rotation	90°∢
	Installation position	Upright to horizontal (in relation to the stem)
	Maintenance	Maintenance-free
Materials	Fitting	GGG 40
	Valve cone	GGG 40, nylon-coated
	Stem	Stainless steel
	Seat	EPDM
	Stem seal	EPDM O-ring
	Stem bearing	RPTFE
Dimensions / Weights	see «Dimensions and weights», page 3	
Motorizing	see the complete overview of water solutions	

Safety notes

- **The butterfly valve has been designed for use in stationary heating, ventilation and air conditioning systems and is not allowed to be used outside the specified field of application, especially in aircraft or in any other airborne means of transport.**
- **It may only be installed by suitably trained personnel.**
  All applicable legal or institutional installation regulations must be complied with.
- **The butterfly valve does not contain any parts that can be replaced or repaired by the user.**
- **The butterfly valve is not allowed to be disposed of as household refuse. All locally valid regulations and requirements must be observed.**
- **The recognized rules should be applied when determining the flow characteristic of final controlling elements.**

Product features

Mode of operation

The butterfly valve is closed or fully opened by a rotary actuator (AF.., SR.., GR.., DGR.., SY..). The rotary actuators are controlled either by a standard controller or by a 1 or 2-wire control unit. The nylon-coated valve cone is pressed into the soft-sealing EPDM seat by the rotary action and guarantees zero leakage losses. The open position is characterized by low flow losses and a high k_{vs} value.

Manual operation

The butterfly valve can be moved into any position, depending on the rotary actuator type. (Lever mounted directly on the butterfly valve on request.)

Installation notes

Recommended mounting positions

The butterfly valve may be mounted either **vertically** or **horizontally**.
It is not permissible, mounting the butterfly valve with the stem pointing downwards.

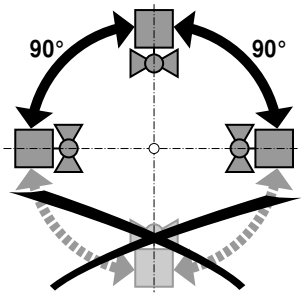

Water quality requirements

The water quality requirements specified in VDI 2035 must be adhered to.

Maintenance

- The butterfly valves and rotary actuators are maintenance-free.
- Before any kind of service work is carried out on actuator sets of this type, it is essential to isolate the rotary actuator from the power supply (by unplugging the power lead). Any pumps in the part of the piping system concerned must also be switched off and the appropriate isolating fittings closed (allow everything to cool down first if necessary and reduce the pressure in the system to atmospheric).
- The system must not be returned to service until the butterfly valve and the rotary actuator have been properly reassembled in accordance with the instructions and the pipework has been refilled in the proper manner.

Accessories

	Description
Mechanical accessories	Lever, Type ZD6-H..

Dimensions [mm]

Dimensional diagrams

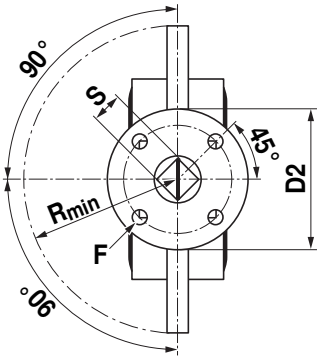

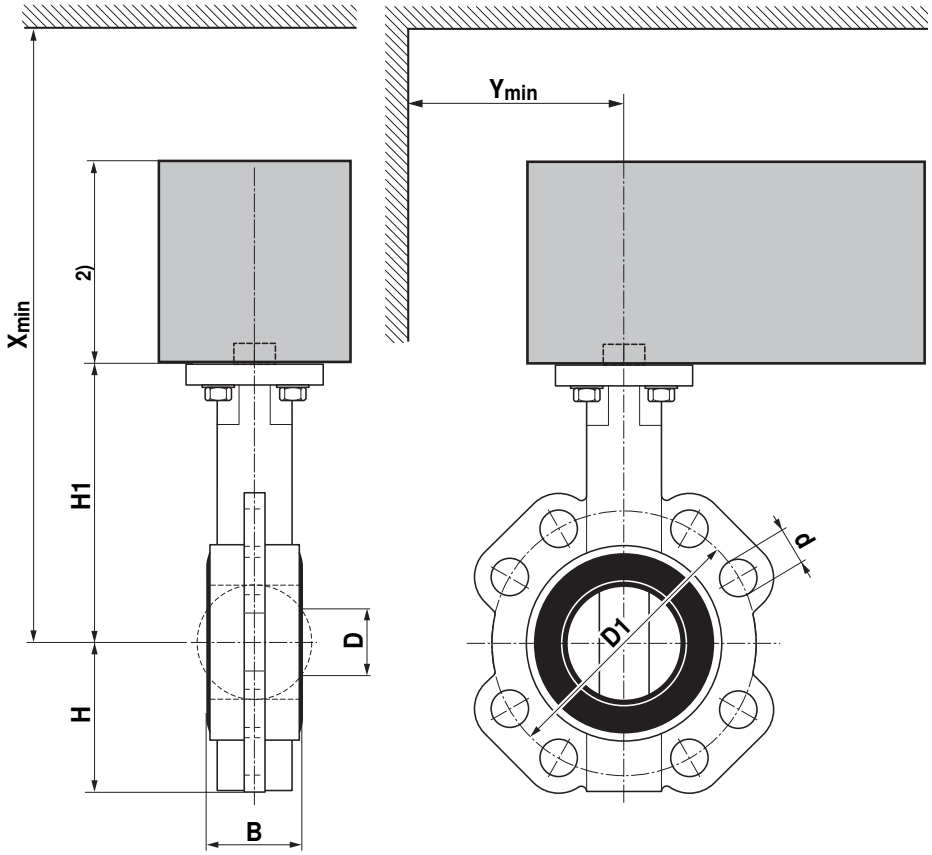

	Mounting flange			
DN [mm]	D2 [mm]	F [3] [mm]	R_{min} [mm]	S [mm]
50	65	F05	200	14
65	65	F05	200	14
80	65	F05	200	14
100	65	F05	200	14
125	90	F07	240	17
150	90	F07	240	17
200	125	F07	240	17
250	125	F10	290	22
300	125	F10	290	22
350	125	F10	290	22

[3] Acc. to ISO 5211
Free stem end
(mounting flange up to end face of stem head)

					PN6		PN10		PN16				
DN [mm]	B [mm]	H [mm]	H1 [mm]	D [mm]	D1 [mm]	d [mm]	D1 [mm]	d [mm]	D1 [mm]	d [mm]	X [1] [mm]	Y [1] [mm]	Weight [kg]
50	43	70	134	33	110	4x14	125	4x19	125	4x19	340	120	2.3
65	46	76	147	48	130	4x14	145	4x19	145	4x19	350	130	2.8
80	46	89	158	66	150	4x19	160	8x19	160	8x19	360	140	3.5
100	52	104	173	91	170	4x19	180	8x19	180	8x19	380	160	5.5
125	56	118	195	115	200	8x19	210	8x19	210	8x19	530	170	7.4
150	56	132	213	142	225	8x19	240	8x23	240	8x23	550	180	9
200	60	167	247	194	280	8x19	295	8x23	295	12x23	590	220	15
250	68	197	287	245	335	12x19	350	12x23	355	12x28	660	250	21.5
300	78	239	316	294	395	12x23	400	12x23	410	12x28	690	290	32.5
350	79	265	345	328	445	12x23	460	16x23	470	16x28	720	320	43.5

[1] Minimum distance with respect to the valve centre
[2] The actuator dimensions can be found on the respective actuator data sheet

Further documentations

- Complete overview of water solutions
- Data sheets for actuators
- Installation instructions for butterfly valves and/or actuators
- Notes for project planning (hydraulic characteristic curves and circuits, installation regulations, commissioning, maintenance etc.)