Differential pressure sensor Air

Differential pressure transmitter with 8 selectable ranges and Modbus funtionality. For monitoring over-, under- or differential pressure of air and other non-flammable and non-aggressive gases. Typical application in HVAC systems for monitoring air filters, fan V-belts as well as for use in pressure differential systems. Options available with LCD display and auto-zero function. IP65 / NEMA 4X rated enclosure.

Type Overview

Type	Measuring range [Pa] [Pa]	Communication	Output signal active pressure	Output signal active volumetric flow	Burst pressure	Display type	Additional features
22ADP-15Q	-150...250	Modbus RTU	0...5 V, 0...10 V	0...5 V, 0...10 V	40 kPa	-	-
22ADP-15QA	-150...250	Modbus RTU	0...5 V, 0...10 V	0...5 V, 0...10 V	40 kPa	-	Auto-Zero
22ADP-15QB	-150...250	Modbus RTU	0...5 V, 0...10 V	0...5 V, 0...10 V	40 kPa	LCD	Auto-Zero
22ADP-15QL	-150...250	Modbus RTU	0...5 V, 0...10 V	0...5 V, 0...10 V	40 kPa	LCD	-

Technical data

Electrical data	Nominal voltage	AC/DC 24 V
	Nominal voltage range	AC 19...29 V / DC 15...35 V
	Power consumption AC	4.3 VA
	Power consumption DC	2.3 W
	Electrical connection	Pluggable spring loaded terminal block max. 2.5 mm^2
	Cable entry	Cable gland with strain relief 2x ø6 mm
Data bus communication	Communication	Modbus RTU
	Number of nodes	Modbus see interface description
Functional data	Sensor technology	Piezo measuring element
	Application	Air
	Multirange	8 measuring ranges selectable
	Voltage output	2 x 0...5 V, 0...10 V, min. resistance 10 kΩ
	Output signal active note	Output 0...5/10 V selectable with switch
	Display	LCD, 29x35 mm with backlight Measured values volumetric flow: m^3/h, cfm (parametrisable) Measured values pressure: Pa, inch WC (parametrisable)
	Typical response time	Adjustable 0.8 s or 4.0 s
Measuring data	Measured values	Differential pressure Volumetric flow
	Measuring fluid	Air and non-aggressive gases

Technical data

Specification Flow	Measuring range volumetric flow	Adjustable via Modbus Default setting: 0...750'000 m^3/h Selectable units: m^3/h, m^3/s, cfm

Specification Pressure

Measuring range pressure settings

Setting	Range [Pa]	Range [inch WC]	Factory setting
S0	0...250	0...1	✓
S1	0...100	0...0.4	
S2	0...50	0...0.2	
S3	0...25	0...0.1	
S4	-25...25	-0.1...0.1	
S5	-50...50	-0.2...0.2	
S6	-100...100	-0.4...0.4	
S7	-150...150	-0.6...0.6	

	Accuracy	Deviation compared to the reference device ±1 Pa at range <250 Pa
	Long term stability	±2.5% FSO (Full Scale Output) / 4 yr.
Safety data	Protection class IEC/EN	III, Safety Extra-Low Voltage (SELV)
	Power source UL	Class 2 Supply
	Degree of protection IEC/EN	IP65
	Degree of protection NEMA/UL	NEMA 4X
	Enclosure	UL Enclosure Type 4X
	EU Conformity	CE Marking
	Certification IEC/EN	IEC/EN 60730-1 and IEC/EN 60730-2-6
	Quality Standard	ISO 9001
	UL Approval	cULus acc. to UL60730-1A/-2-6, CAN/CSA E60730-1
	Type of action	Type 1
	Rated impulse voltage supply	0.8 kV
	Pollution degree	3
	Ambient humidity	Max. 95% RH, non-condensing
	Ambient temperature	-10...50°C [14...122°F]
	Fluid temperature	-10...50°C [15...122°F]
Materials	Cable gland	PA6, black
	Housing	Cover: PC, orange Bottom: PC, orange Seal: NBR70, black UV resistant

Safety notes

This device has been designed for use in stationary heating, ventilation and air-conditioning systems and must not be used outside the specified field of application. Unauthorised modifications are prohibited. The product must not be used in relation with any equipment that in case of a failure may threaten humans, animals or assets.

Ensure all power is disconnected before installing. Do not connect to live/operating equipment.

Only authorised specialists may carry out installation. All applicable legal or institutional installation regulations must be complied with during installation.

The device contains electrical and electronic components and must not be disposed of as household refuse. All locally valid regulations and requirements must be observed.

Remarks

Automated zero-point calibration (Auto Zero)

Transmitters equipped with the auto-zero calibration are maintenance-free.

The auto-zero calibration electronically adjusts the transmitter zero every 10 minutes.The function eliminates all output signal drift due to thermal, electronic or mechanical effects. The auto-zero adjustment takes approx. 4 seconds after which the device returns to its normal measuring mode. During the 4 second adjustment period, the output and display values will freeze to the latest measured value.

Manual zero-point calibration

In normal operation zero-point calibration should be executed every 12 months.

Attention! For executing zero-point calibration, the power supply must be connected one hour before.

• Release both tube connectors from the pressure ports + and -

• Press the button "Manual zero-point calibration" until the LED lights permanently

• Wait until the LED flashes again and reinstall the tube connectors to the pressure ports (note + and -)

Indicators and Operation

Indicators

Depending on the device and the number of measured values, the display automatically scales. Parameters, such as the fading in/out of measured values, brightness and traffic light function, are changed via the app or bus system. During the boot process, the software and hardware versions are displayed.

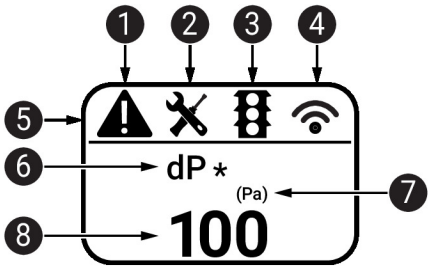

1. Fault / sensor failure
2. Service / visual inspection due
3. TLF (traffic light function) active (thresholds for display colour changes)
4. Radio active (not available)
5. Status bar
6. Measured value (* appears when TLF function is activated for this value)
7. Unit of measure
8. Measured value

Parts included

Description	Type
Mounting plate L housing	A-22D-A10
Duct connector kit, PVC tube 2 m, 2 connection elements (Plastic) for 22ADP-..	A-22AP-A08
Cable Gland with strain relief ø6...8 mm	
Dowels	
Screws	

Accessories

Optional accessories

Description	Type
Pitot tube, Metal, L 40 mm, Tube connection 5 mm	A-22AP-A02
Pitot tube, Metal, L 100 mm, Tube connection 5 mm	A-22AP-A04
Connection adapter flex conduit, M20x1.5, for cable gland 1x 6 mm, Multipack 10 pcs.	A-22G-A01.1
Connection adapter flex conduit, M20, for cable gland 2x 6 mm, Multipack 10 pcs.	A-22G-A02.1

Accessories

	Description	Type
	Airflow volume probe 100 mm for round duct, min. 2 m/s, Probe length 100 mm	EXT-AC-R100
	Airflow volume probe 125 mm for round duct, min. 2 m/s, Probe length 125 mm	EXT-AC-R125
	Airflow volume probe 160 mm for round duct, min. 2 m/s, Probe length 160 mm	EXT-AC-R160
	Airflow volume probe 200 mm for round duct, min. 2 m/s, Probe length 200 mm	EXT-AC-R200
	Airflow volume probe 250 mm for round duct, min. 2 m/s, Probe length 250 mm	EXT-AC-R250
	Airflow volume probe 315 mm for round duct, min. 2 m/s, Probe length 315 mm	EXT-AC-R315
	Airflow volume probe 400 mm for round duct, min. 2 m/s, Probe length 400 mm	EXT-AC-R400
	Airflow volume probe 500 mm for round duct, min. 2 m/s, Probe length 500 mm	EXT-AC-R500
	Airflow volume probe 630 mm for round duct, min. 2 m/s, Probe length 630 mm	EXT-AC-R630
	Airflow volume probe 200 mm for rectangular duct, min. 2 m/s, Probe length 200 mm	EXT-AC-L200
	Airflow volume probe 250 mm for rectangular duct, min. 2 m/s, Probe length 250 mm	EXT-AC-L250
	Airflow volume probe 300 mm for rectangular duct, min. 2 m/s, Probe length 300 mm	EXT-AC-L300
	Airflow volume probe 400 mm for rectangular duct, min. 2 m/s, Probe length 400 mm	EXT-AC-L400
	Airflow volume probe 500 mm for rectangular duct, min. 2 m/s, Probe length 500 mm	EXT-AC-L500
	Airflow volume probe 600 mm for rectangular duct, min. 2 m/s, Probe length 600 mm	EXT-AC-L600
	Airflow volume probe 700 mm for rectangular duct, min. 2 m/s, Probe length 700 mm	EXT-AC-L700
Tools	**Description**	**Type**
	Belimo Duct Sensor Assistant App	Belimo Duct Sensor Assistant App
	Bluetooth dongle for Belimo Duct Sensor Assistant App	A-22G-A05

* Bluetooth dongle A-22G-A05

Certified and available in North America, European Union, EFTA States and UK.

Service

Tools connection

This sensor can be operated and parametrised using the Belimo Duct Sensor Assistant App.

When using the Belimo Duct Sensor Assistant App, the bluetooth dongle is required to enable communication between the app and the Belimo sensor.

For the standard operation and parametrisation of the sensor the bluetooth dongle and the Belimo Duct Sensor Assistant App are not needed. The sensor will arrive pre-configured with the factory default settings shown above.

Requirement:

- Bluetooth dongle (Belimo Part No: A-22G-A05)
- Bluetooth-capable smartphone
- Belimo Duct Sensor Assistant App (Google Play & Apple App Store)

Procedure:

- Plug the Bluetooth dongle into the sensor via the Micro-USB connector or by means of the interface PCB
- Connect Bluetooth-capable smartphone with Bluetooth dongle
- Select parametrisation in the Belimo Duct Sensor Assistant App

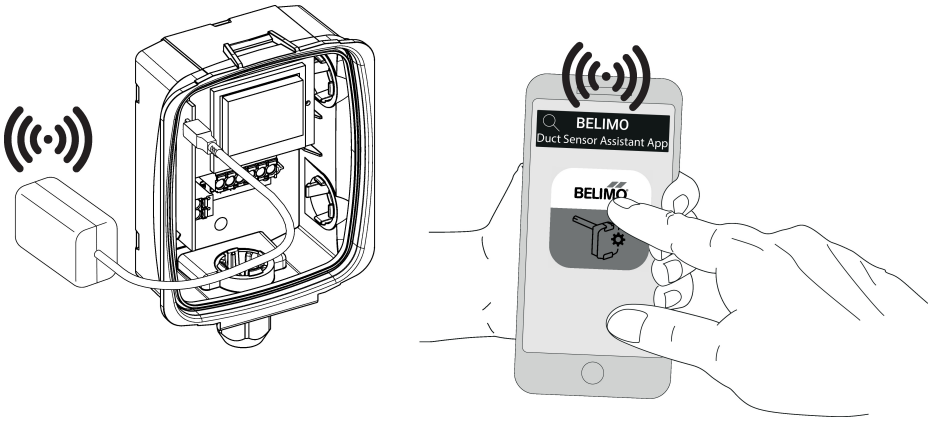

Wiring diagram

Notes

Supply from isolating transformer.

The wiring of Modbus RTU (RS-485) is to be carried out in accordance with applicable regulations (www.modbus.org). The device has switchable resistors for bus termination.

Modbus-GND: Supply and communication are not galvanically isolated. Connect earth signal of the devices with one another.

Wiring diagram

Manual zero-point calibration ①
red: Error ②
yellow: Tx ③
yellow: Rx ④
Status LED ⑤ and ⑥
Factory setting *
Pressure unit P
Response time T
Output signal U

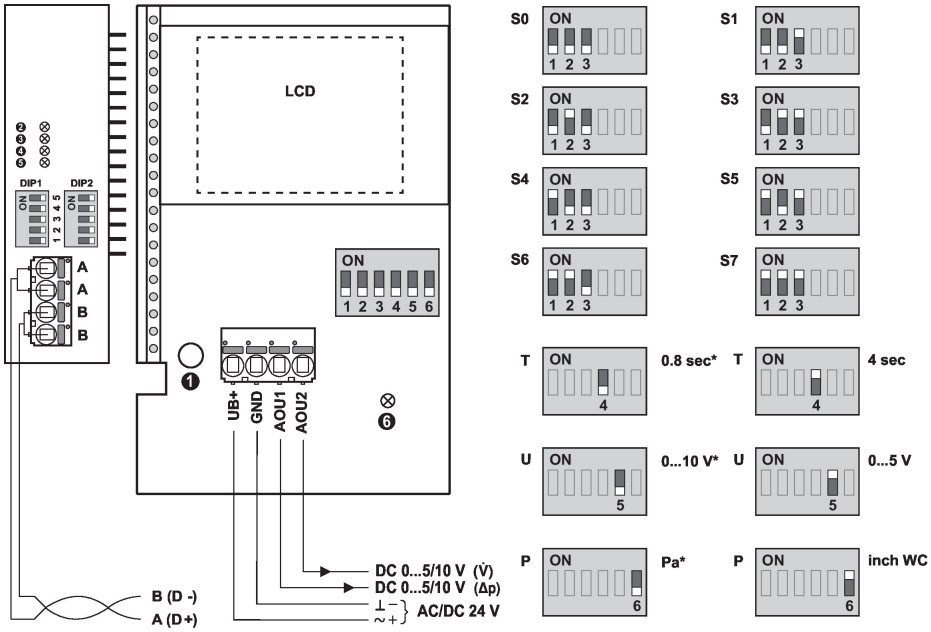

Setting	Range [Pa]	Range [inch WC]	Factory setting
S0	0...250	0...1	✓
S1	0...100	0...0.4	
S2	0...50	0...0.2	
S3	0...25	0...0.1	
S4	-25...25	-0.1...0.1	
S5	-50...50	-0.2...0.2	
S6	-100...100	-0.4...0.4	
S7	-150...150	-0.6...0.6	

Detailed documentation

The separate document Sensor Modbus-Register informs about Modbus register, addressing, parity and bus termination (DIP1: address, DIP2: baud rate, parity, bus termination)

In addition to the information on the bus, the following analogue outputs are available:

AOU1: differential pressure

AOU2: volumetric flow

The volumetric flow is calculated from the differential pressure, the k-factor and the height above sea level.

Factory setting for the k-factor is 1.00 and for the height above sea level 330 metres.

The values of the k-factor and the height can be changed via bus system.

Wiring RS-485 Modbus RTU

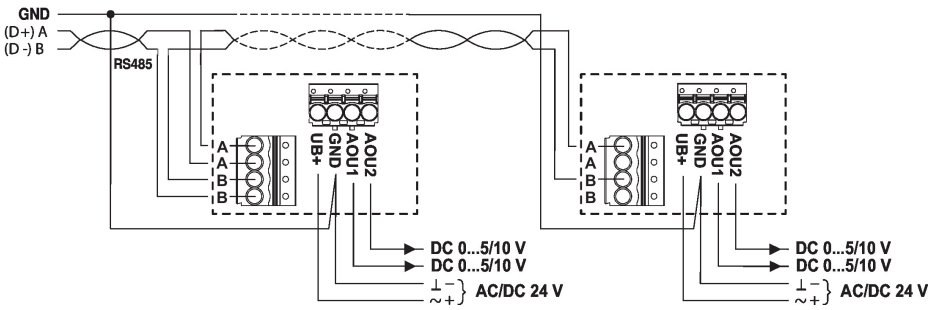

Dimensions

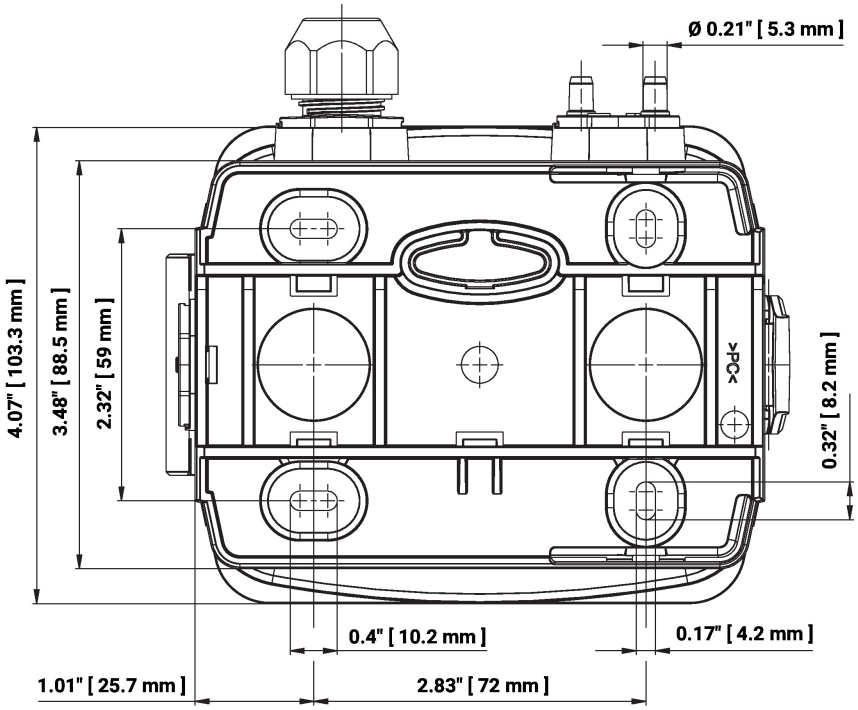

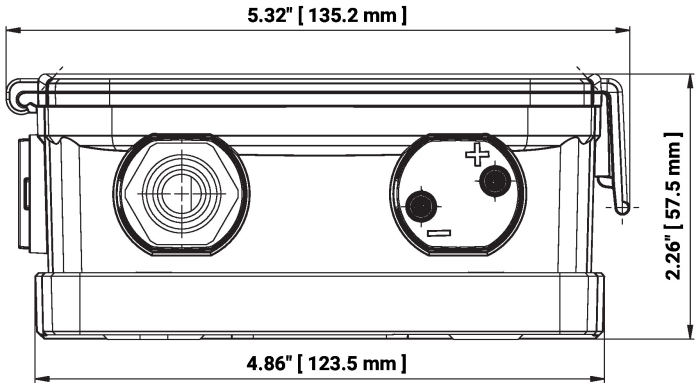

Type	Weight
22ADP-15Q	0.40 kg
22ADP-15QA	0.41 kg
22ADP-15QB	0.43 kg
22ADP-15QL	0.42 kg

Further documentation

- Modbus Interface description
- Installation instructions