Modulating globe valve actuator for 2-way and 3-way globe valves

- Actuating force 1000 N
- Nominal voltage AC/DC 24 V
- Control modulating 2...10 V
- Stroke 20 mm

## Technical data

| | | |
|---|---|---|
| **Electrical data** | Nominal voltage | AC/DC 24 V |
| | Nominal voltage frequency | 50/60 Hz |
| | Nominal voltage range | AC 19.2...28.8 V / DC 21.6...28.8 V |
| | Power consumption in operation | 3.5 W |
| | Power consumption in rest position | 1.5 W |
| | Power consumption for wire sizing | 5.5 VA |
| | Connection supply / control | Terminals with cable 1 m, 4x 0.75 mm² (Terminal 4 mm²) |
| | Parallel operation | Yes (note the performance data) |
| **Functional data** | Actuating force motor | 1000 N |
| | Operating range Y | 2...10 V |
| | Input impedance | 100 kΩ |
| | Position feedback U | 2...10 V |
| | Position feedback U note | Max. 0.5 mA |
| | Position accuracy | ±5% |
| | Manual override | with push-button, can be locked |
| | Stroke | 20 mm |
| | Running time motor | 35 s / 20 mm |
| | Sound power level, motor | 60 dB(A) |
| | Adaptation setting range | manual (automatic on first power-up) |
| | Position indication | Mechanical, 5...20 mm stroke |
| **Safety data** | Protection class IEC/EN | III, Safety Extra-Low Voltage (SELV) |
| | Power source UL | Class 2 Supply |
| | Degree of protection IEC/EN | IP54 |
| | Degree of protection NEMA/UL | NEMA 2 |
| | Enclosure | UL Enclosure Type 2 |
| | EMC | CE according to 2014/30/EU |
| | Certification IEC/EN | IEC/EN 60730-1 and IEC/EN 60730-2-14 |
| | UL Approval | cULus according to UL60730-1A, UL60730-2-14 and CAN/CSA E60730-1<br>The UL marking on the actuator depends on the production site, the device is UL-compliant in any case |
| | Type of action | Type 1 |
| | Rated impulse voltage supply / control | 0.8 kV |
| | Pollution degree | 3 |

## Technical data

| | | |
|---|---|---|
| **Safety data** | Ambient humidity | Max. 95% RH, non-condensing |
| | Ambient temperature | 0...50°C [32...122°F] |
| | Storage temperature | -40...80°C [-40...176°F] |
| | Servicing | maintenance-free |
| **Weight** | Weight | 1.2 kg |

## Safety notes

- This device has been designed for use in stationary heating, ventilation and air-conditioning systems and must not be used outside the specified field of application, especially in aircraft or in any other airborne means of transport.
- Outdoor application: only possible in case that no (sea) water, snow, ice, insolation or aggressive gases interfere directly with the device and that it is ensured that the ambient conditions remain within the thresholds according to the data sheet at any time.
- Only authorised specialists may carry out installation. All applicable legal or institutional installation regulations must be complied with during installation.
- The switch for changing the direction of motion and so the closing point may be adjusted only by authorised specialists. The direction of motion is critical, particularly in connection with frost protection circuits.
- The device may only be opened at the manufacturer's site. It does not contain any parts that can be replaced or repaired by the user.
- The device contains electrical and electronic components and must not be disposed of as household refuse. All locally valid regulations and requirements must be observed.

## Product features

**Operating mode**

The actuator is connected with a standard control signal of 0...10 V and drives to the position defined by the control signal. The measuring voltage U serves for the electrical display of the actuator position 0.5...100% and as control signal for other actuators.

**Simple direct mounting**

Simple direct mounting on the globe valve by means of form-fit hollow clamping jaws. The actuator can be rotated by 360° on the valve neck.

**Manual override**

Manual override with push-button possible (the gear train is disengaged for as long as the button is pressed or remains locked).

The stroke can be adjusted by using a hexagon socket screw key (4 mm), which is inserted into the top of the actuator. The stroke shaft extends when the key is rotated clockwise.

**High functional reliability**

The actuator is overload protected, requires no limit switches and automatically stops when the end stop is reached.

**Home position**

Factory setting: Actuator stem is retracted.

When valve-actuator combinations are shipped, the direction of motion is set in accordance with the closing point of the valve.

The first time the supply voltage is switched on, i.e. at the time of commissioning, the actuator carries out an adaptation, which is when the operating range and position feedback adjust themselves to the mechanical setting range.

The actuator then moves into the position defined by the control signal.

**Adaptation and synchronisation**

An adaptation can be triggered manually by pressing the "Adaptation" button. Both mechanical end stops are detected during the adaptation (entire setting range).

The actuator then moves into the position defined by the control signal.

**Setting direction of motion**

When actuated, the direction-of-stroke switch changes the direction of motion in normal operation.

## Accessories

| Electrical accessories | Description | Type |
|---|---|---|
| | Auxiliary switch 2x SPDT add-on | S2A-H |
| | Stem heater for LV.., NV.., SV.. actuator, AC/DC 24 V, 30 W | ZH24-1-A |

## Electrical installation

**Supply from isolating transformer.**
**Parallel connection of other actuators possible. Observe the performance data.**
**Direction of stroke switch factory setting: Actuator stem retracted (▲).**

**Wire colours:**
1 = black
2 = red
3 = white
5 = orange

**Wiring diagrams**

AC/DC 24 V, modulating

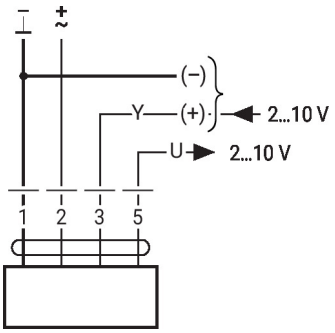


Override control (frost protection circuit)

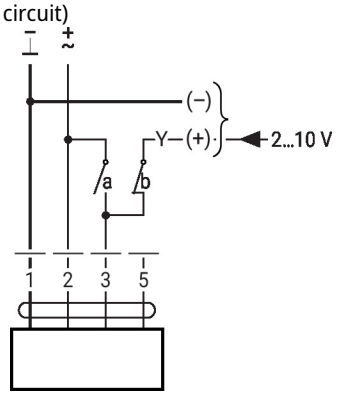


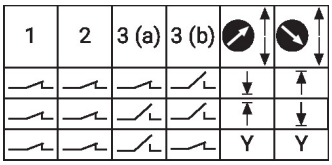

## Operating controls and indicators

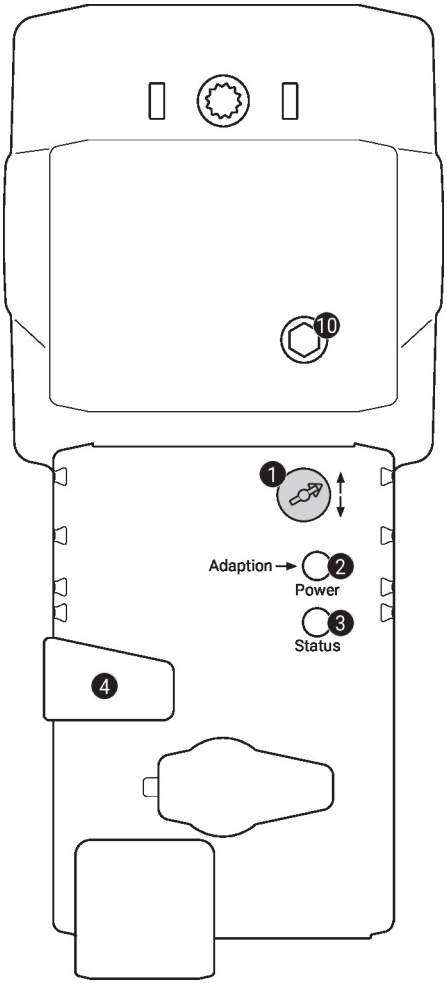


**1 Direction of stroke switch**

| | |
|---|---|
| Switch over: | Direction of stroke changes |

**2 Push-button and LED display green**

| | |
|---|---|
| Off: | No power supply or malfunction |
| On: | In operation |
| Press button: | Triggers stroke adaptation, followed by standard mode |

**3 Push-button and LED display yellow**

| | |
|---|---|
| Off: | Standard mode |
| On: | Adaptation or synchronisation process active |
| Press button: | No function |

**4 Manual override button**

| | |
|---|---|
| Press button: | Gear train disengages, motor stops, manual override possible |
| Release button: | Gear train engages, standard mode |

**10 Manual override**

| | |
|---|---|
| Clockwise: | Actuator stem extends |
| Counterclockwise: | Actuator stem retracts |

## Dimensions

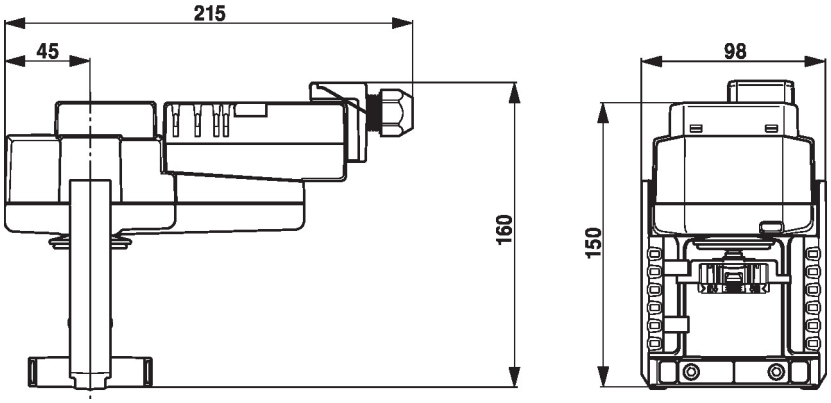


## Further documentation

- The complete product range for water applications
- Data sheets for globe valves
- Installation instructions for actuators and/or globe valves
- Notes for project planning 2-way and 3-way globe valves
- General notes for project planning